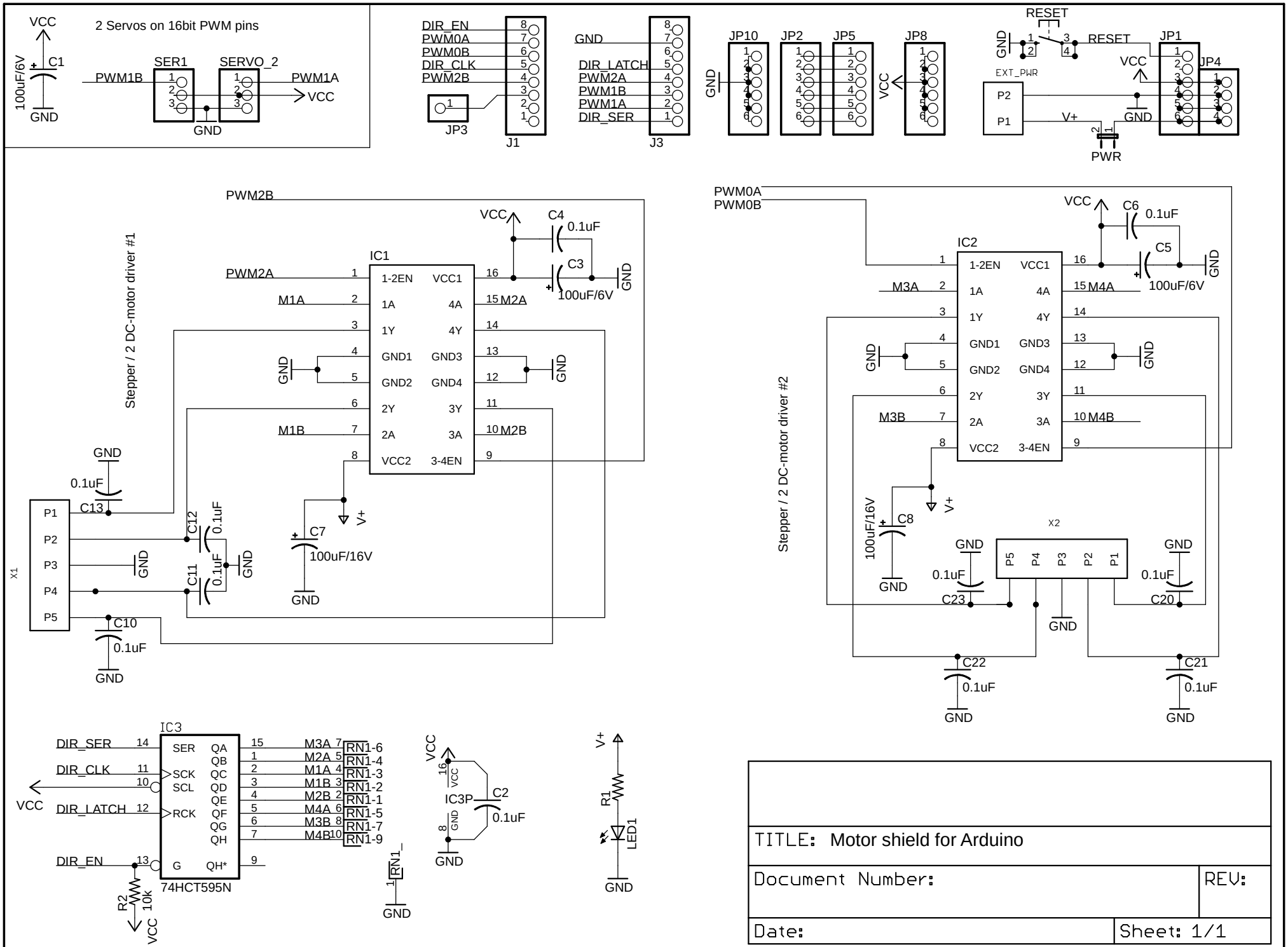
2 Servos on 16bit PWM pins
VCC
C1
100uF/6V
GND
PWM1B
SER1
SERVO_2
PWM1A
VCC
GND
DIR_EN
PWM0A
PWM0B
DIR_CLK
PWM2B
JP3
J1
GND
DIR_LATCH
PWM2A
PWM1B
PWM1A
DIR_SER
J3
JP10
JP2
JP5
JP8
RESET
EXT_PWR
P2
P1
V+
PWR
JP1
JP4
Stepper / 2 DC-motor driver #1
IC1
1-2EN
VCC1
1A
4A
1Y
4Y
GND1
GND3
GND2
GND4
2Y
3Y
2A
3A
VCC2
3-4EN
M1A
M1B
M2A
M2B
C4
0.1uF
C3
100uF/6V
C7
100uF/16V
C11
C12
C13
C10
X1
P1
P2
P3
P4
P5
Stepper / 2 DC-motor driver #2
IC2
M3A
M3B
M4A
M4B
C6
C5
C8
100uF/16V
X2
C23
C20
C22
C21
IC3
SER
SCK
SCL
RCK
G
QA
QB
QC
QD
QE
QF
QG
QH
QH*
74HCT595N
DIR_SER
DIR_CLK
DIR_LATCH
DIR_EN
R2
10k
RN1-6
RN1-4
RN1-3
RN1-2
RN1-1
RN1-5
RN1-7
RN1-9
RN1_
IC3P
C2
R1
LED1
TITLE: Motor shield for Arduino
Document Number:
REV:
Date:
Sheet: 1/1