FOR COMPREHENSIVE PRODUCT SELECTION DETAILS, KINDLY REACH OUT TO OUR SALES DEPARTMENT.
有关全面的产品选择详细信息，请联系我们的销售部门。



LCTC®

ZHEJIANG LEICHI TECHNOLOGY CO., LTD.
浙江雷驰科技有限公司

**TELEPHONE（电话）**：+86 150 6829 6819

**MAILBOX（邮箱）**：ariel@leichitec.com

**WEBSITEHTTPS（网站）**：https://leichitec.en.alibaba.com/

**ADDRESS（地址）**：JINQIAO WEST ROAD, YUEQING CITY, WENZHOU, ZHEJIANG PROVINCE（浙江省温州乐清市金桥西路）

ZHEJIANG LEICHI TECHNOLOGY CO., LTD.
浙江雷驰科技有限公司

LCTC®

## SOLID STATE RELAY

# PRODUCT CATALOG

## 固态继电器产品目录


2023.12

# PRODUCT CATALOG



IF THERE ARE ERRORS IN THE PRODUCT INTRODUCTION, PLEASE CONTACT OUR SALES DEPARTMENT.
如果产品介绍有错误的地方，请您联系我们销售部门。

# ▶ DC CONTROL AC DC-AC（直流控制交流DC-AC）


LC-1-480 ☐ DA


LCSSR-1DA ☐ A


SSR-1DA ☐ A

| | |
|---|---|
| Control（控制） | DC to AC |
| Load Current（负载电流） | 10A/25A/40A/50A/60A<br>75A/80A/90A/100A/120A |
| Control Voltage（控制电压） | 3-32VDC |
| Max Input Current（最大输入电流） | 12mA |
| Must Opelease Voltage（确保导通工作电压） | 2.8VDC |
| Must Release Voltage（确保导通释放电压） | 1.5VDC |
| Output Voltage（输出电压） | 24-480VAC |
| Peak Voltage（峰值电压） | 800V |
| Operation Temperature（工作温度） | -30°C to 80°C |
| Max Off-State Leakage Current（最大断态漏电流） | 2mA |
| Max On-State Voltage Drop（最大通态压降） | 1.5V |
| Dielectric Strength（介质耐压） | 2500V |
| Certificates（证书） | CE |
| Dimenslons(mm)（尺寸） | 58.5x45.5x29 |
| Net Weight（净重） | 95g |

# ▶ AC CONTROL AC-AC (交流控制交流AC-AC)


LC-1-480 ☐ AA


LCSSR-1AA ☐ A

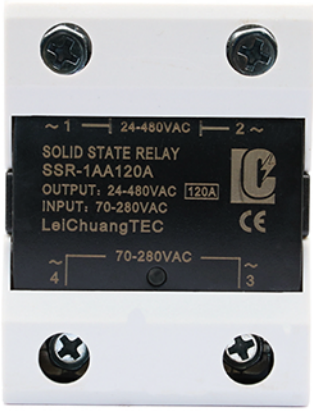


SSR-1AA ☐ A

| | |
|---|---|
| Control (控制) | AC to AC |
| Load Current (负载电流) | 10A/25A/40A/50A/60A<br>75A/80A/90A/100A/120A |
| Control Voltage (控制电压) | 70-280VAC |
| Max Input Current (最大输入电流) | 15mA |
| Must Opelease Voltage (确保导通工作电压) | 70VAC |
| Must Release Voltage (确保导通释放电压) | 30VAC |
| Output Voltage (输出电压) | 24-480VAC |
| Peak Voltage (峰值电压) | 800V |
| Operation Temperature (工作温度) | -30°C to 80°C |
| Max Off-State Leakage Current (最大断态漏电流) | 2mA |
| Max On-State Voltage Drop (最大通态压降) | 1.5V |
| Dielectric Strength (介质耐压) | 2500V |
| Certificates (证书) | CE |
| Dimenslons(mm) (尺寸) | 58.5x 45.5X29 |
| Net Weight (净重) | 95g |

# ▶ DC CONTROL DC-DC（直流控制直流DC-DC）


LC-1-480 ☐ DD


LCSSR-1DD ☐ A

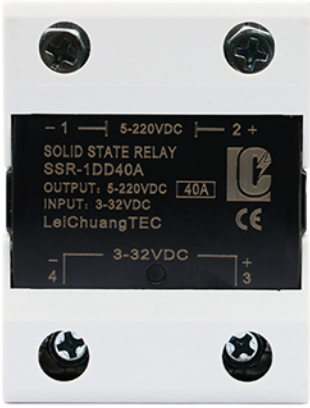


SSR-1DD ☐ A

| | |
|---|---|
| Control（控制） | DC to DC |
| Load Current（负载电流） | 10A/25A/40A/50A/60A<br>75A/80A/90A/100A/120A |
| Control Voltage（控制电压） | 3-32VDC |
| Max Input Current（最大输入电流） | 40mA |
| Must Opelease Voltage（确保导通工作电压） | 3VDC |
| Must Release Voltage（确保导通释放电压） | 1.5VDC |
| Output Voltage（输出电压） | 5-220VDC |
| Peak Voltage（峰值电压） | 250VDC |
| Operation Temperature（工作温度） | -30°C to 80°C |
| Max Off-State Leakage Current（最大断态漏电流） | 0.01mA |
| Max On-State Voltage Drop（最大通态压降） | 0.5V |
| Dielectric Strength（介质耐压） | 2500V |
| Certificates（证书） | CE |
| Dimenslons(mm)（尺寸） | 58.5x45.5x29 |
| Net Weight（净重） | 95g |

# ONE OPEN AND ONE CLOSED DC CONTROL AC RANDOM SOLID STATE RELAY（一开一闭）（随机固态继电器）

## LCSSR-1DA ☐ AK


SSR-1DA ☐ AK

| | |
|---|---|
| Control（控制） | DC to AC |
| Load Voltage（负载电压） | 10A/25A/40A |
| Control Voltage（控制电压） | 3-32VDC |
| Control Current（最大输入电流） | 25mA |
| On Voltage（输出电流） | 24-480VAC |
| Operation Temperature（工作温度） | -20°C to~+75°C |
| Max Off-State Leakage Current（最大断态漏电流） | 2mA |
| On-State Voltage（通态电压） | 1.5V |
| Certificates（证书） | CE |
| Mounting methods（安装方式） | Screw |
| Indicator（指示器） | indicating light（指示灯） |
| Dielectric Strength（介质耐压） | 2500V |

## SSR-1DA ☐ AP


SSR-1DA ☐ AP

| | |
|---|---|
| Control（控制） | Random |
| Load Voltage（负载电压） | 10A/25A/40A/60A<br>80A/100A/120A |
| Control Voltage（控制电压） | 3-6VDC/10-14VDC/22-26VDC |
| Max Input Current（最大输入电流） | 15mA |
| Operating Voltage（工作电压） | 1.5VDC |
| Output Voltage（释放电压） | 24-480VAC |
| Peak Voltage（峰值电压） | 800V |
| Operation Temperature（工作温度） | -30°C~75°C |
| Max Off-State Leakage Current（最大断态漏电流） | 2mA |
| Max On-statevoltage Drop（最大通态压降） | 1.5V |
| Dielectric Strength（介质耐压） | 2500V |
| Certificates（证书） | CE |
| Dimensions(mm)（尺寸） | 58.5x45.5x29 |
| Net Weight（净重） | 95g |

# ▶ SINGLE WAY DUAL CONTROL（双路单控）
# DUAL WAY DUAL CONTROL（双路双控）

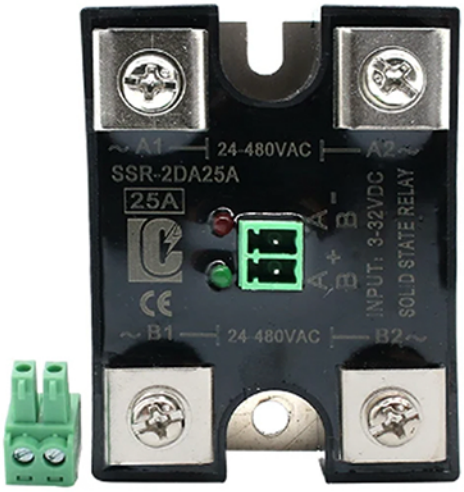


SSR-2DA ☐ A

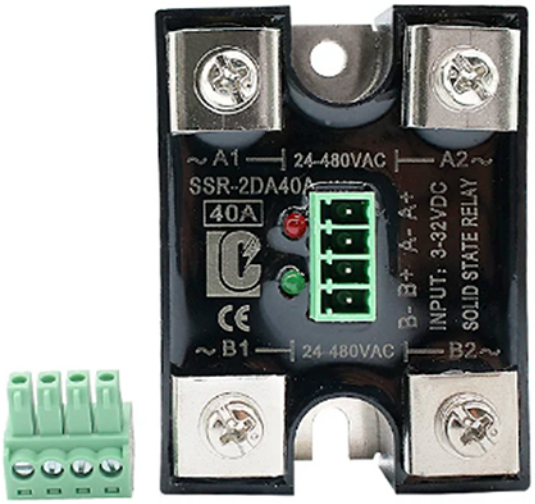


SSR-2DA ☐ A

| | |
|---|---|
| Control（控制） | DC to AC |
| Load Current（负载电流） | 10A/25A/40A |
| Control Voltage（控制电压） | 3-32VDC |
| Output Voltage（输出电压） | 24-480VAC |
| Control Current（最大控制电流） | 30mA |
| On Voltage（导通电压） | ≤1.5V |
| On Off Time（开关时间） | ≤10ms |
| Dielectric Strength（介质耐压） | 2500VAC |
| Insulation Resistance（绝缘电阻） | 1000M |
| Mounting Methods（安装方法） | Screw |
| Indicator（指示器） | Indicating light |
| Certificates（证书） | CE |

# THREE-PHASE AIRCRAFT COVER
（三相黑壳 DA AA）

## LCTH480 ☐ AA


LCTH480 ☐ AA

| | |
|---|---|
| Control（控制） | AC to AC |
| Load Voltage（负载电压） | 10A/25A/40A/60A<br>80A/100A/120A |
| Control Voltage（控制电压） | 70-280VAC |
| Max Input Current（最大输入电流） | 40mA |
| Must Operation Voltage（确保导通工作电压） | 70VAC |
| Must Release Voltage（确保导通释放电压） | 30VAC |
| Output Voltage（输出电压） | 24-480VAC |
| Peak Voltage（峰值电压） | 800V |
| Operation Temperature（工作温度） | -30C° to 80C° |
| Max Off-State Leakage Current（最大关断状态泄漏电流） | 2mA |
| Max On-state Voltage Drop（最大导通压降） | 1.5V |
| Dielectric Strength（介质耐压） | 2500V |
| Certificates（证书） | CE |
| Dimensions(mm)（尺寸） | 105x74x33 |
| Net Weight（净重） | 400g |

## LCTH480 ☐ DA


LCTH480 ☐ DA

| | |
|---|---|
| Control（控制） | DC to AC |
| Load Voltage（负载电压） | 10A/25A/40A/60A<br>80A/100A/120A |
| Control Voltage（控制电压） | 3-32VAC |
| Max Input Current（最大输入电流） | 40mA |
| Must Operation Voltage（确保导通工作电压） | 3VDC |
| Must Release Voltage（确保导通释放电压） | 2VDC |
| Output Voltage（输出电压） | 24-480VAC |
| Peak Voltage（峰值电压） | 800V |
| Operation Temperature（工作温度） | -30C° to 80C° |
| Max Off-State Leakage Current（最大关断状态泄漏电流） | 2mA |
| Max On-state Voltage Drop（最大导通压降） | 1.5V |
| Dielectric Strength（介质耐压） | 2500V |
| Certificates（证书） | CE |
| Dimensions(mm)（尺寸） | 105x74x33 |
| Net Weight（净重） | 400g |

# ▶ THREE-PHASE AIRCRAFT COVER
（三相飞机盖 DA AA）

## SSR-3AA ☐ A


SSR-3AA ☐ A

| | |
|---|---|
| Control（控制） | AC to AC |
| Load Voltage（负载电压） | 10A/25A/40A/60A<br>80A/100A/120A |
| Input Voltage（输入电压） | 70-280VAC |
| Max Input Current（最大输入电流） | 15mA |
| Must Operation Voltage（确保导通工作电压） | 70VAC |
| Must Release Voltage（确保导通释放电压） | 30VAC |
| Output Voltage（输出电压） | 24-480VAC |
| Peak Voltage（峰值电压） | 800V |
| Operation Temperature（工作温度） | -30C° to 80C° |
| Max Off-State Leakage Current（最大关断状态泄漏电流） | ≤8mA |
| Max On-State Voltage Drop（最大导通压降） | 1.5V |
| Dielectric Strength（介质耐压） | 2500V |
| Certificates（证书） | CE |
| Dimensions(mm)（尺寸） | 106x75x39 |
| Net Weight（净重） | 350g |

## SSR-3DA ☐ A


SSR-3DA ☐ A

| | |
|---|---|
| Control（控制） | DC to AC |
| Load Voltage（负载电压） | 10A/25A/40A/60A<br>80A/100A/120A |
| Control Voltage（控制电压） | 3-32VDC |
| Max Input Current（最大输入电流） | 40mA |
| Must Operation Voltage（确保导通工作电压） | 3VDC |
| Must Release Voltage（确保导通释放电压） | 2VDC |
| Output Voltage（输出电压） | 24-480VAC |
| Peak Voltage（峰值电压） | 800V |
| Operation Temperature（工作温度） | -30C° to 80C° |
| Max Off-State Leakage Current（最大关断状态泄漏电流） | 2mA |
| Max On-State Voltage Drop（最大导通压降） | 1.5V |
| Dielectric Strength（介质耐压） | 2500V |
| Certificates（证书） | CE |
| Dimensions(mm)（尺寸） | 106x75x39 |
| Net Weight（净重） | 350g |

# THREE-PHASE MOTORFORWARD AND REVERSE（三相电机正反转 LCZF）


SSR-3DA ☐ A

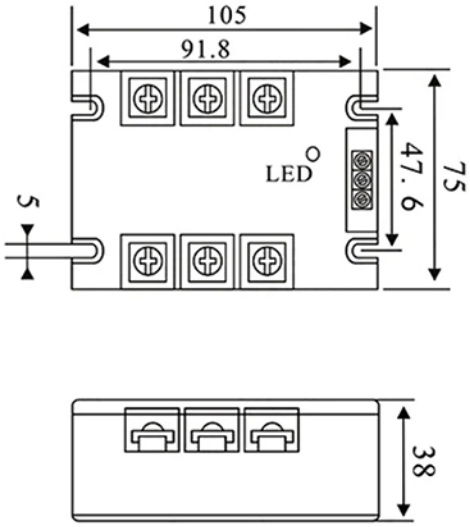


Product Size

| | |
|---|---|
| Control（控制） | DC to AC |
| Load Current（负载电流） | 10A/25A/40A/60A/80A |
| Control Voltage（控制电压） | 10-30VDC |
| Load Voltage（负载电压） | 24-480VAC |
| Control Current（控制电流） | 30mA |
| On Statestep Down（通态降压） | 1.5V |
| Ambienttemperature（温度） | -30°C~+70°C |
| Off-State Leakage Current（断态漏电流） | ≤5mA |
| On Off time（开关时间） | 1S |
| Mounting Methods（安装方法） | Bolted |
| Dielectric Strength（介质耐压） | 2500V |

# AA RED SHELL OR BLACK SHELL SOLID STATE RELAY (AA 红壳 or 黑壳固态继电器)


LCSSR-1DA ☐ A
(10-120A)


LCDS-48ZA2 ☐ A
(10-40A)

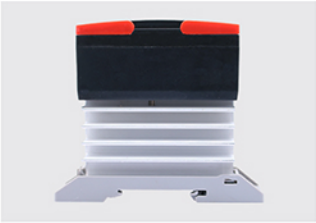

Red Shell Radiator
(红壳散热器)

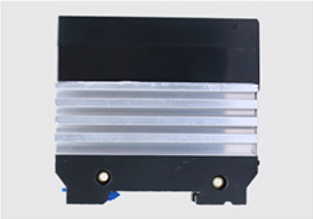

Black Shell Radiator
(黑壳散热器)

| | |
|---|---|
| Control (控制) | AC to AC |
| Load Current (负载电流) | 10A/25A/40A/50A<br>60A/80A/100A/120A |
| Control Voltage (控制电压) | 70-280VAC |
| Max Input Current (最大输入电流) | 15mA |
| Must Opelease Voltage (确保导通电压) | 70VAC |
| Must Release Voltage (确保导通释放电压) | 30VAC |
| Load voltagee (负载电压) | 24-480VAC |
| Peak Voltage (峰值电压) | 800VAC |
| Operation Temperature (工作温度) | -20°C to 80°C |
| Max Off-State Leakage Current (最大断态漏电流) | 15mA |
| Max On-State Voltage Drop (最大通态压降) | ≤1.5V |
| Dielectric Strength (介质耐压) | 2500V |
| Certificates (证书) | CE |

# ▶ DA RED SHELL OR BLACK SHELL SOLID STATE RELAY （DA 红壳 or 黑壳固态继电器）


LCDR-480 ☐ DA
(10-120A)


LCDS-48ZD3 ☐ A
(10-40A)

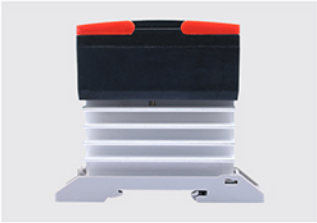

Red Shell Radiator
(红壳散热器)

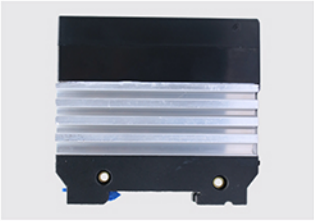

Black Shell Radiator
(黑壳散热器)

| | |
|---|---|
| Control（控制） | DC to AC |
| Load Current（负载电流） | 10A/25A/40A/50A<br>60A/80A/100A/120A |
| Control Voltage（控制电压） | 3-32VDC |
| Max Input Current（最大输入电流） | 12mA |
| Must Opelease Voltage（确保导通工作电压） | 3VDC |
| Must Release Voltage（确保导通释放电压） | 1.5VDC |
| Load voltagee（负载电压） | 24-480VAC |
| Peak Voltage（峰值电压） | 800VAC |
| Operation Temperature（工作温度） | -20°C to 80°C |
| Max Off-State Leakage Current（最大断态漏电流） | 12mA |
| Max On-State Voltage Drop（最大通态压降） | ⩽1.5V |
| Dielectric Strength（介质耐压） | 2500V |
| Certificates（证书） | CE |

# DD RED SHELL OR BLACK SHELL SOLID STATE RELAY（DD 红壳 or 黑壳固态继电器）


LCDR-480 ☐ DD
(10-120A)


LCDS-75DD3 ☐ A
(10-40A)

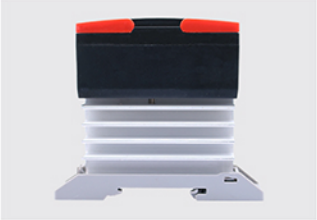

Red Shell Radiator
(红壳散热器)

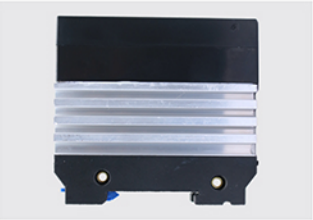

Black Shell Radiator
(黑壳散热器)

| | |
|---|---|
| Control（控制） | DC to DC |
| Load Current（负载电流） | 10A/25A/40A/50A<br>60A/80A/100A/120A |
| Control Voltage（控制电压） | 3-32VDC |
| Max Input Current（最大输入电流） | 30mA |
| Must Opelease Voltage（必须工作电压） | 3VDC |
| Must Release Voltage（必须释放电压） | 1.5VDC |
| Load Voltagee（负载电压） | 3-75VDC |
| Peak Voltage（峰值电压） | 250VDC |
| Operation Temperature（工作温度） | -20°C to 80°C |
| Max Off-State Leakage Current（最大断态漏电流） | 0.1mA |
| Max On-State Voltage Drop（最大通态压降） | 0.5V |
| Dielectric Strength（介质耐压） | 2500V |
| Certificates（证书） | CE |

# ▶ DC-AC WHITE SHELL SOLID STATE RELAY

（DC-AC 白壳固态继电器）


LCDS ☐ 48ZD3


White Shell Radiator
(白壳散热器)

| | |
|---|---|
| Control（控制） | DC to AC |
| Load Current（负载电流） | 10A/25A/40A |
| Control Voltage（控制电压） | 3-32VDC |
| Max Input Current（最大输入电流） | 12mA |
| Must Opelease Voltage（确保导通工作电压） | 3VDC |
| Must Release Voltage（确保导通释放电压） | 1.5VDC |
| Load Voltagee（负载电压） | 24-480VAC |
| Peak Voltage（峰值电压） | 800VAC |
| Operation Temperature（工作温度） | -30°C to 80°C |
| Max Off-State Leakage Current（最大断态漏电流） | 2mA |
| Max On-State Voltage Drop（最大通态压降） | ≤1.5V |
| Dielectric Strength（介质耐压） | 2500V |
| Certificates（证书） | CE |
| Dimensions(mm)（尺寸） | 82.5x24.5x76.5 |
| Weights（净重） | 245g |

# ▶ VD SINGLE PHASE VOLTAGE REGULATION（VD 单相调压器）


LCSSR-1VD ☐ A
(10-120A)


SSR-1VD ☐ A
(10-120A)


LCDS- ☐ 25VD
(10-40A)

| | |
|---|---|
| **Control（控制）** | Analog Signal(模拟信号) |
| Load Current（负载电流） | 10A/25A/40A/50A/60A<br>80A/90A/100A/120A |
| **Input（输入）** | 0-10VDC |
| Output Voltage（输出电压） | 0-250VAC |
| **Peak Voltage（峰值电压）** | 800V |
| Operation Temperature（工作温度） | -30°C to 80°C |
| **Max Off-State Leakage Current（最大断态漏电流）** | 5mA |
| Max On-State Voltage Drop（最大通态压降） | 3V |
| **Dielectric Strength（介质耐压）** | 2500V |
| Certificates（证书） | CE |
| **Dimensions (mm)（尺寸）** | 57.4x 44.8x28 |
| Net Weight（净重） | 100g |

# ▶ VF SINGLE PHASE VOLTAGE REGULATION (VF 单相调压器)


LCSSR-1VF ☐ A
(10-120A)

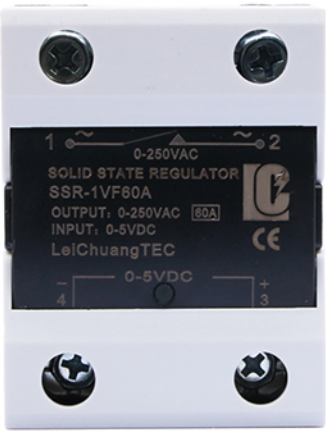


SSR-1VF ☐ A
(10-120A)


LCDS- ☐ 22VF
(10-40A)

| | |
|---|---|
| **Control (控制)** | Analog Signal(模拟信号) |
| Load Current (负载电流) | 10A/25A/40A/50A/60A<br>80A/90A/100A/120A |
| **Input (输入)** | 0-5VDC |
| Output Voltage (输出电压) | 0-250VAC |
| **Peak Voltage (峰值电压)** | 800V |
| Operation Temperature (工作温度) | -30°C to 80°C |
| **Max Off-State Leakage Current (最大断态漏电流)** | 2mA |
| Max On-State Voltage Drop (最大通态压降) | 3V |
| **Dielectric Strength (介质耐压)** | 2500V |
| Certificates (证书) | CE |
| **Dimensions (mm) (尺寸)** | 57.4x 44.8x28 |
| Net Weight (净重) | 100g |

# ▶ LA SINGLE PHASE VOLTAGE REGULATION (LA 单相调压器)


LCSSR-1LA ☐ A
(10-120A)


SSR-1LA ☐ A
(10-120A)


LCDS- ☐ 25LA
(10-120A)

| | |
|---|---|
| **Control (控制)** | Analog Signal(模拟信号) |
| Load Current (负载电流) | 10A/25A/40A/50A/60A<br>80A/90A/100A/120A |
| **Input (输入)** | 4-20mA |
| Output Voltage (输出电压) | 0-250VAC |
| **Peak Voltage (峰值电压)** | 800V |
| Operation Temperature (工作温度) | -30°C to 80°C |
| **Max Off-State Leakage Current (最大断态漏电流)** | 5mA |
| Max On-State Voltage Drop (最大通态压降) | 1.5V |
| **Dielectric Strength (介质耐压)** | 2500V |
| Certificates (证书) | CE |
| **Dimensions (mm) (尺寸)** | 57.4x 44.8x28 |
| Net Weight (净重) | 100g |

# THREE-PHASE AC VOLTAGE REGULATING MODULE (三相交流调压模块)


LCSCR-3- ☐ V40ZA

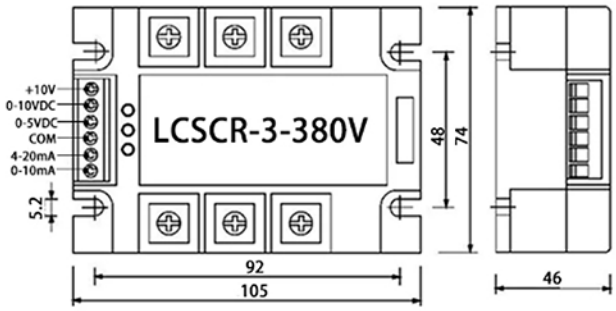


Dimensions (mm) (尺寸)

## Product Current Calculation Method

| Product current | Input voltage | Resistive load per phase |
|---|---|---|
| 40A | 380V | 7.5KW(12A) |
| 60A | | 11.3KW(18A) |
| 80A | | 15KW(24A) |
| 100A | | 18.8KW(30A) |
| 120A | | 21.9KW(35A) |
| 150A | | 28.1KW(45A) |
| 200A | | 37.5KW(60A) |

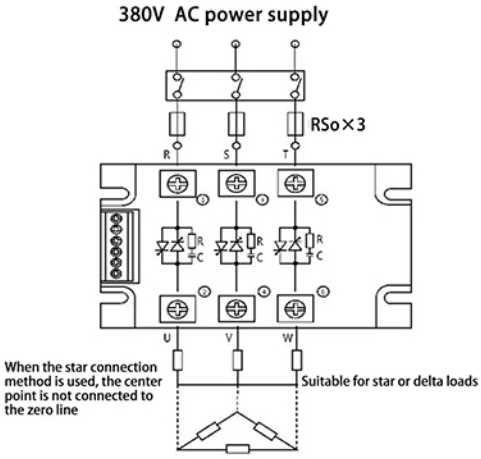


Strong Electrical circuit wiring diagram

## Input Control Method

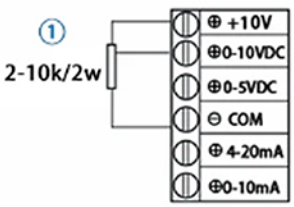


2-10k manual control input

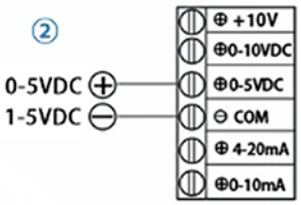


0-5VDC
1-5VDC control input

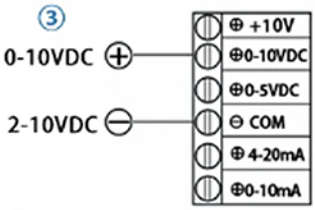


0-10VDC
2-10VDC control input

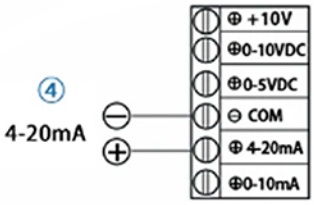


4-20mA control input

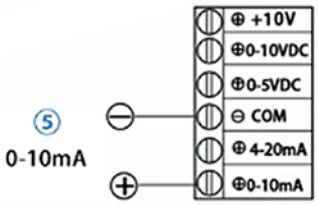


0-10mA control input

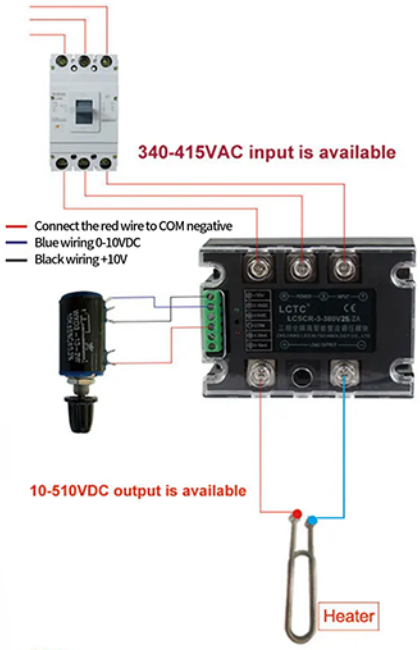


Note.

1. A radiator must be equipped if the current exceeds 10A.
2. Load debugging must be carried during debugging.
3. Asynchronous motor is not available

# ▶ SINGLE THREE-PHASE RECTIFIER VOLTAGE REGULATOR（单三相整流调压）

LCTC®

**Control Input**

1 — ⊕10V
2 — ⊕0-10VDC
3 — ⊕0-5VDC
4 — ⊖COM
5 — ⊕4-20mA
6 — ⊕0-10mA


## LCSCR-3- ☐ V40ZL

**Control Input**

1 — ⊕10V
2 — ⊕0-10VDC
3 — ⊕0-5VDC
4 — ⊖COM
5 — ⊕4-20mA
6 — ⊕0-10mA


## LCSCR-1- ☐ V40ZL

**LCSCR-3 Three phase wiring diagram**

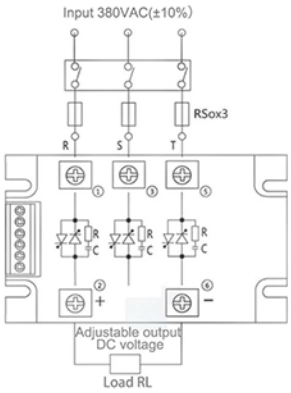


**LCSCR-1&LCSCR-3 Dimensions**

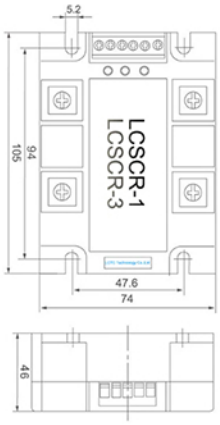


**LCSCR-1 single phase wiring diagram**

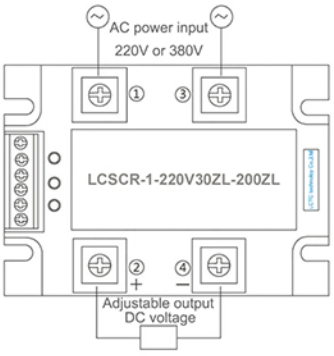


**LCSCR-1&LCSCR-3 Dimensions**

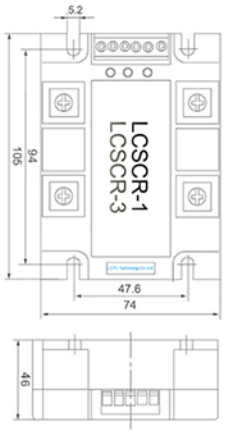


## Input Control Method

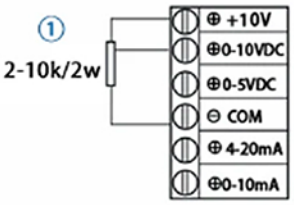


2-10k manual control input

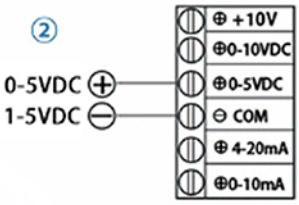


0-5VDC
1-5VDC control input

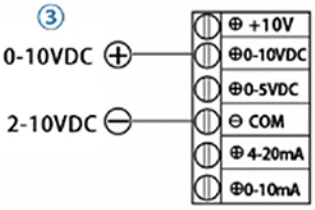


0-10VDC
2-10VDC control input

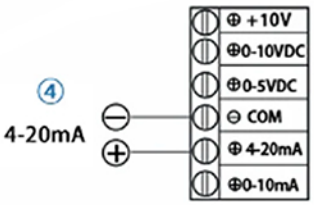


4-20mA control input

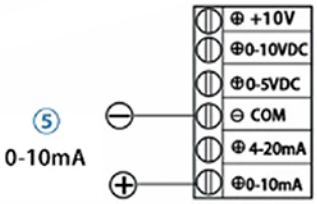


0-10mA control input

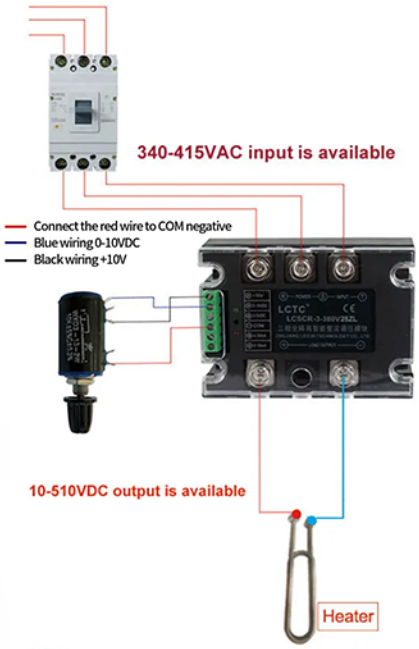


Note.

1. A radiator must be equipped if the current exceeds 10A.
2. Load debugging must be carried during debugging.
3. Asynchronous motor is not available

# ▶ SINGLE AND FULLY ISOLATED INTELLIGENT VOLTAGE REGULATION（单全隔离智能调压）


DTY- 220V ☐ P1


DTY- 380V ☐ P1

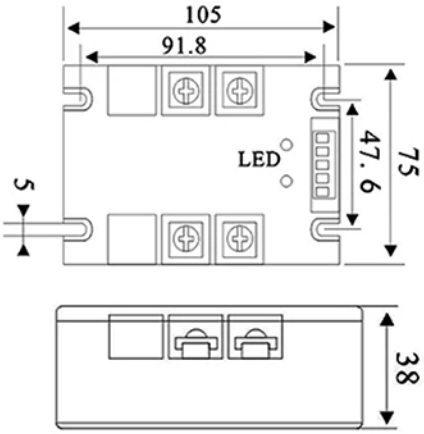


Dimensions (mm) (尺寸)

## Input TerminalInstructions

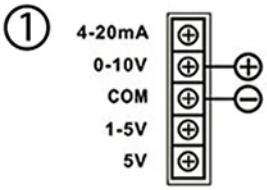


0-10V Control input

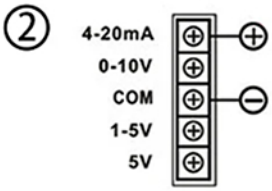


4-20mA Control input

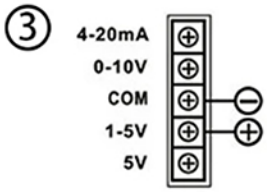


1-5V Control input

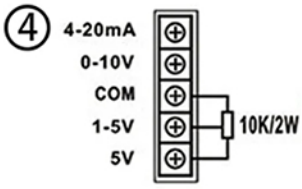


Potentiometer manual adjustment

| | |
|---|---|
| load Voltage（负载电压） | 0-220VAC/0-380VAC |
| Load Current（负载电流） | 10A/25A/40A/60A/80A/100A/120A/150A/180A/200A |
| Control Voltage（控制电压） | 4-20mA/0-10V/COM/1-5V/2W(10K) |
| Control Current（控制电流） | ≤20mA |
| On State Voltage Drop（通态压降） | ≤1.5V |
| On State Leakage Current（断态漏电流） | ≤5mA |
| Dielectric Withst And Voltage（介电耐压） | 4000VAC 50Hz/60Hz 1min |
| Operation Temperature（工作温度） | -30°C to 75°C |
| Insulation Resistance（绝缘电阻） | 1000MΩ(500VDC) |
| Installation Method（安装方法） | Bolt installation |
| Working Indicatar（工作指示器） | LED |

# ▶ RANDOM INDUSTRIAL SSR

（随机型 工业继电器）

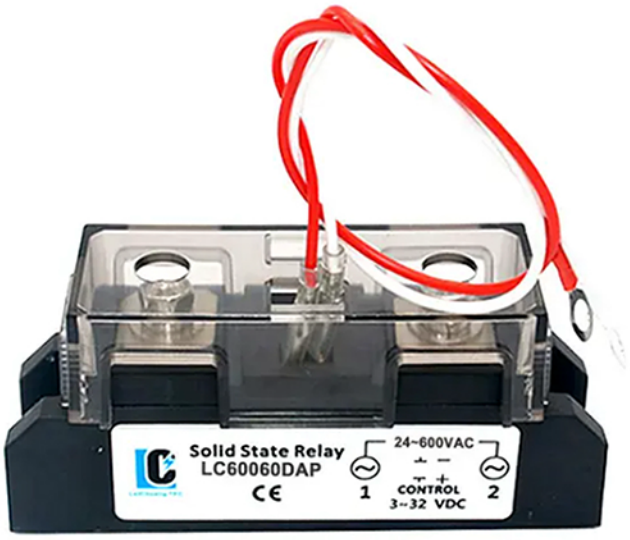


LC600 ☐ DAP

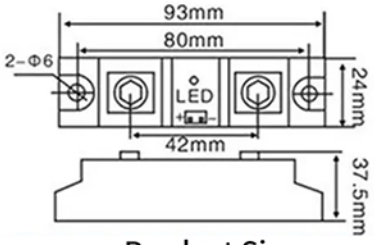


Product Size

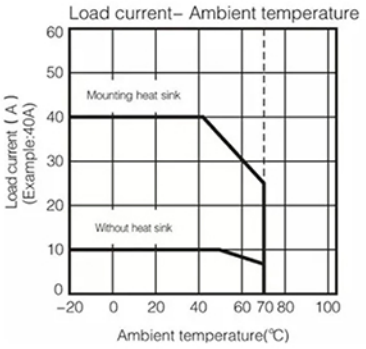


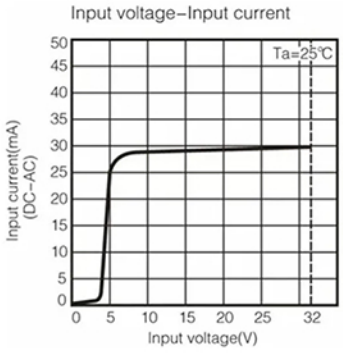


| | |
|---|---|
| **Control（控制）** | DC to AC |
| Load Current（负载电流） | 60A/80A/100A/120A/150A |
| **Input Voltage（输入电压）** | 3-32VDC |
| Max Input Current（输入电流） | 12mA |
| **Must Operation Voltage（确保导通工作电压）** | 3VDC |
| Must Release Voltage（确保导通释放电压） | 1.5VDC |
| **Output Voltage （输出电压）** | 24-600VAC |
| Operation Temperature（工作温度） | -30°C to 80°C |
| **Max Off-State Leakage Current（最大断态泄漏电流）** | ⩽2mA |
| Max On-State Voltage Drop（最大通态压降） | ⩽1.5V |
| **On Off Time （开关时间）** | ⩽10ms |
| Insulation Resistance （绝缘电阻） | 1000MΩ |
| **Dielectric Strength （介质耐压）** | 2500V |
| Peak Voltage （峰值电压） | 1600V |
| **Certificates（证书）** | CE |

# ▶ DA INDUSTRIAL SSR（DA 工业级继电器）


LC1600 ☐ DAZ

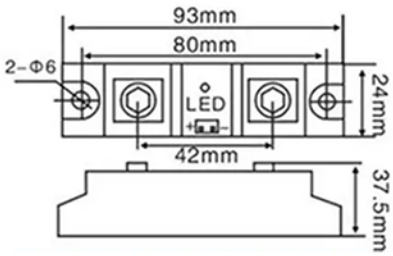


Product Size

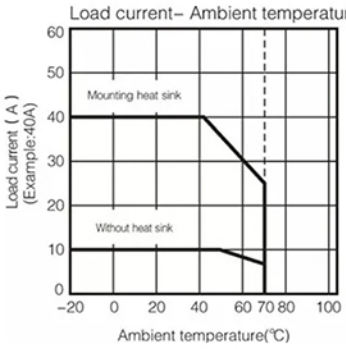


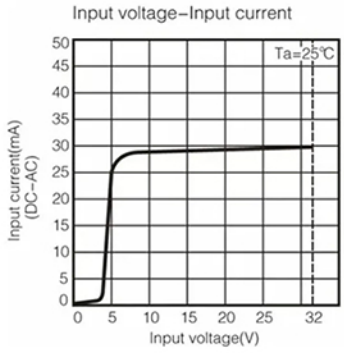


| | |
|---|---|
| **Control（控制）** | DC to AC |
| Load Current（负载电流） | 60A/80A/100A/120A/150A |
| **Input Voltage（输入电压）** | 3-32VDC |
| Max Input Current（输入电流） | 12mA |
| **Must Operation Voltage（确保导通工作电压）** | 3V |
| Must Release Voltage（确保导通释放电压） | 1.5VDC |
| **Output Voltage （输出电压）** | 24-1600VAC |
| Operation Temperature（工作温度） | -30°C to 80°C |
| **Max Off-State Leakage Current（最大断态泄漏电流）** | ⩽2mA |
| Dielectric Strength （介质耐压） | 2500V |
| **On Off Time （开关时间）** | ⩽10ms |
| Insulation Resistance （绝缘电阻） | 1000MΩ |
| **Max On-State Voltage Drop（最大通态压降）** | ⩽1.5V |
| Peak Voltage （峰值电压） | 1600V |
| **Certificates（证书）** | CE |

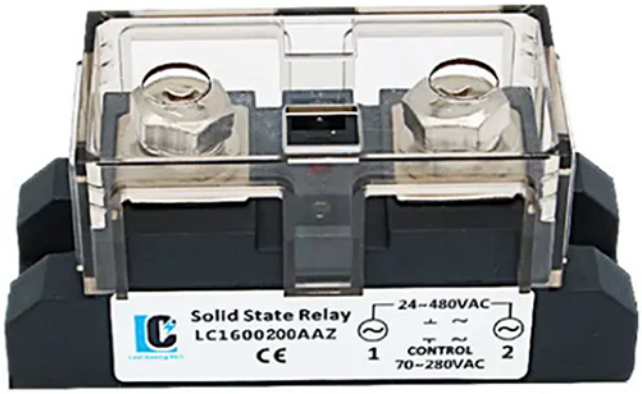


LC1600 ☐ AAZ

| | |
|---|---|
| Control（控制） | AC to AC |
| Load Current（负载电流） | 60A/80A/100A/120A/150A/180A<br>200A/250A/300A/350A/400A |
| Input Voltage（输入电压） | 70-280VAC |
| Max Input Current（输入电流） | 15mA |
| Must Operation Voltage（确保导通工作电压） | 70VAC |
| Must Release Voltage（确保导通释放电压） | 30VAC |
| Output Voltage （输出电压） | 24-480VAC |
| Operation Temperature（工作温度） | -30°C to 80°C |
| Max Off-State Leakage Current（最大断态泄漏电流） | ⩽2mA |
| Dielectric Strength （介质耐压） | 2500V |
| On Off Time （开关时间） | ⩽10ms |
| Insulation Resistance （绝缘电阻） | 1000MΩ |
| Max On-State Voltage Drop（最大通态压降） | ⩽1.5V |
| Peak Voltage （峰值电压） | 1600V |
| Certificates（证书） | CE |

# ▶ I CHANNEL SRELAY MODULE

（1路继电器模组）



**SSR - 0□ - 5DA - C□ (DC control AC)**

- CP:Control terminal cmmon positive
- CP:Control terminal common negative
- 1 ,2 ,4 ,6 ,8 Channels

**SSR - 0□ - 5DD - C□ (DC control DC)**

- CP:Control terminal common positive
- CP:Control terminal common negative
- 1 ,2 ,4 ,6 ,8 Channels

**Selection Table**

| | | Model | | | Model | |
|---|---|---|---|---|---|---|
| 01 | | SSR-01-5DA | SSR-01-5DD | | SSR-01-5DA | SSR-01-5DD |
| 02 | CP Control | SSR-02-5DA-CP | SSR-02-5DD-CP | CN Control | SSR-02-5DA-CN | SSR-02-5DD-CN |
| 04 | | SSR-04-5DA-CP | SSR-04-5DD-CP | | SSR-04-5DA-CN | SSR-04-5DD-CN |
| 06 | | SSR-06-5DA-CP | SSR-06-5DD-CP | | SSR-06-5DA-CN | SSR-06-5DD-CN |
| 08 | | SSR-08-5DA-CP | SSR-08-5DD-CP | | SSR-08-5DA-CN | SSR-08-5DD-CN |

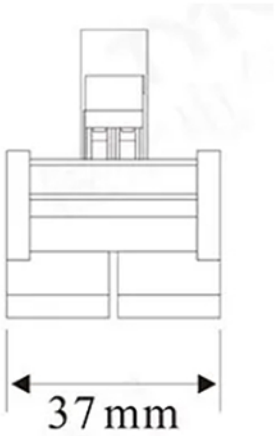


Front

**Specifications**

| | | |
|---|---|---|
| Control model | DC-AC | DC-DC |
| Load current | 5A | 5A |
| Load voltage | 24-480VAC | 5-60VDC |
| Control voltage | 3-32VDC | 3-32VDC |
| Control current | DC5-25mA | DC5-25mA |
| ON voltage | ≤1.5V | ≤1.5V |
| Off Leakage Current | ≤2mA | ≤2mA |
| On-off Time | ≤10mS | ≤10mS |
| Dielectric Strength | 2500VAC | 2500VAC |
| Insulation Resistance | 1000MΩ | 1000MΩ |
| A mbient Temperature | -30~+75℃ | -30~+75℃ |
| Mounting Methods | DIN-Rail Mounting | DIN-Rail Mounting |
| The work instructions | Indicator light | Indicator light |

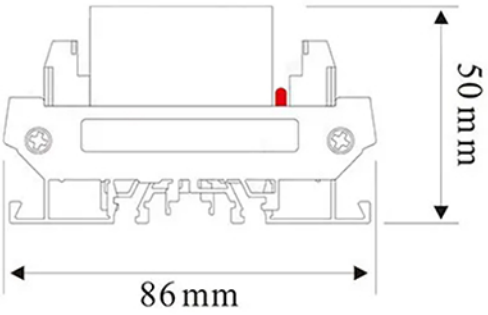


Side

# ▶ 2 CHANNELS RELAY MODULE

（2路继电器模组）



**SSR - 0□ - 5DA - C□ (DC control AC)**

- CP:Control terminal cmmon positive
- CP:Control terminal common negative
- 1 ,2 ,4 ,6 ,8 Channels

**SSR - 0□ - 5DD - C□ (DC control DC)**

- CP:Control terminal common positive
- CP:Control terminal common negative
- 1 ,2 ,4 ,6 ,8 Channels

**Selection Table**

| | | Model | | | Model | |
|---|---|---|---|---|---|---|
| 01 | | SSR-01-5DA | SSR-01-5DD | | SSR-01-5DA | SSR-01-5DD |
| 02 | CP Control | SSR-02-5DA-CP | SSR-02-5DD-CP | CN Control | SSR-02-5DA-CN | SSR-02-5DD-CN |
| 04 | | SSR-04-5DA-CP | SSR-04-5DD-CP | | SSR-04-5DA-CN | SSR-04-5DD-CN |
| 06 | | SSR-06-5DA-CP | SSR-06-5DD-CP | | SSR-06-5DA-CN | SSR-06-5DD-CN |
| 08 | | SSR-08-5DA-CP | SSR-08-5DD-CP | | SSR-08-5DA-CN | SSR-08-5DD-CN |

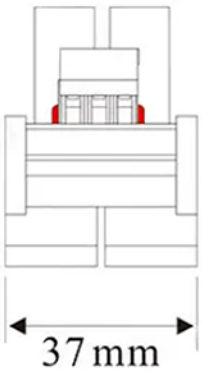


2 Channels Front

**Specifications**

| Control model | DC-AC | DC-DC |
|---|---|---|
| Load current | 5A | 5A |
| Load voltage | 24-480VAC | 5-60VDC |
| Control voltage | 3-32VDC | 3-32VDC |
| Control current | DC5-25mA | DC5-25mA |
| ON voltage | ≤1.5V | ≤1.5V |
| Off Leakage Current | ≤2mA | ≤2mA |
| On-off Time | ≤10mS | ≤10mS |
| Dielectric Strength | 2500VAC | 2500VAC |
| Insulation Resistance | 1000MΩ | 1000MΩ |
| A mbient Temperature | -30~+75℃ | -30~+75℃ |
| Mounting Methods | DIN-Rail Mounting | DIN-Rail Mounting |
| The work instructions | Indicator light | Indicator light |

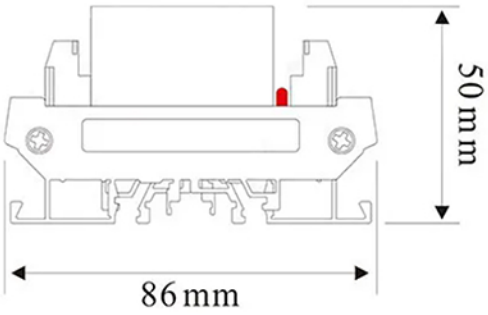


Side

# ▶ 4 CHANNELS RELAY MODULE

（4路继电器模组）



**SSR - 0□ - 5DA - C□ (DC control AC)**

- CP:Control terminal cmmon positive
- CP:Control terminal common negative
- 1 ,2 ,4 ,6 ,8 Channels

**SSR - 0□ - 5DD - C□ (DC control DC)**

- CP:Control terminal common positive
- CP:Control terminal common negative
- 1 ,2 ,4 ,6 ,8 Channels

| Selection Table | | | | | | |
|---|---|---|---|---|---|---|
| | | Model | | | Model | |
| 01 | | SSR-01-5DA | SSR-01-5DD | | SSR-01-5DA | SSR-01-5DD |
| 02 | CP Control | SSR-02-5DA-CP | SSR-02-5DD-CP | CN Control | SSR-02-5DA-CN | SSR-02-5DD-CN |
| 04 | | SSR-04-5DA-CP | SSR-04-5DD-CP | | SSR-04-5DA-CN | SSR-04-5DD-CN |
| 06 | | SSR-06-5DA-CP | SSR-06-5DD-CP | | SSR-06-5DA-CN | SSR-06-5DD-CN |
| 08 | | SSR-08-5DA-CP | SSR-08-5DD-CP | | SSR-08-5DA-CN | SSR-08-5DD-CN |

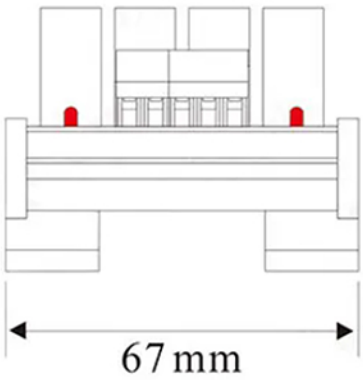


4 Channel Front

| Specifications | | |
|---|---|---|
| Control model | DC-AC | DC-DC |
| Load current | 5A | 5A |
| Load voltage | 24-480VAC | 5-60VDC |
| Control voltage | 3-32VDC | 3-32VDC |
| Control current | DC5-25mA | DC5-25mA |
| ON voltage | ≤1.5V | ≤1.5V |
| Off Leakage Current | ≤2mA | ≤2mA |
| On-off Time | ≤10mS | ≤10mS |
| Dielectric Strength | 2500VAC | 2500VAC |
| Insulation Resistance | 1000MΩ | 1000MΩ |
| A mbient Temperature | -30~+75℃ | -30~+75℃ |
| Mounting Methods | DIN-Rail Mounting | DIN-Rail Mounting |
| The work instructions | Indicator light | Indicator light |

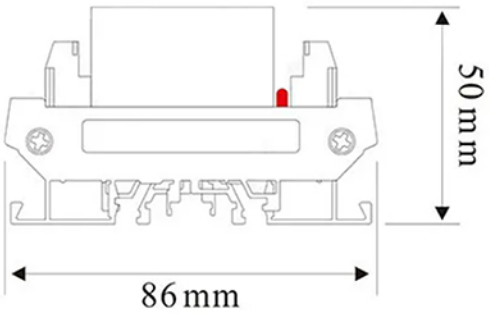


Side

# ▶ 6 CHANNELS RELAY MODULE

（6路继电器模组）



**SSR - 0□ - 5DA - C□ (DC control AC)**

- CP:Control terminal cmmon positive
- CP:Control terminal common negative
- 1 ,2 ,4 ,6 ,8 Channels

**SSR - 0□ - 5DD - C□ (DC control DC)**

- CP:Control terminal common positive
- CP:Control terminal common negative
- 1 ,2 ,4 ,6 ,8 Channels

**Selection Table**

| | | Model | | | Model | |
|---|---|---|---|---|---|---|
| 01 | | SSR-01-5DA | SSR-01-5DD | | SSR-01-5DA | SSR-01-5DD |
| 02 | CP Control | SSR-02-5DA-CP | SSR-02-5DD-CP | CN Control | SSR-02-5DA-CN | SSR-02-5DD-CN |
| 04 | | SSR-04-5DA-CP | SSR-04-5DD-CP | | SSR-04-5DA-CN | SSR-04-5DD-CN |
| 06 | | SSR-06-5DA-CP | SSR-06-5DD-CP | | SSR-06-5DA-CN | SSR-06-5DD-CN |
| 08 | | SSR-08-5DA-CP | SSR-08-5DD-CP | | SSR-08-5DA-CN | SSR-08-5DD-CN |

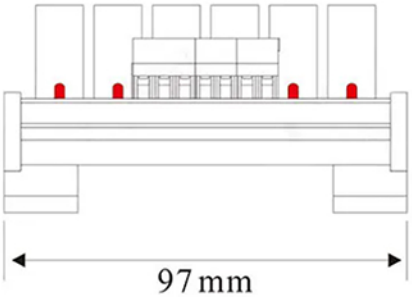


6 Channel Front

**Specifications**

| | | |
|---|---|---|
| Control model | DC-AC | DC-DC |
| Load current | 5A | 5A |
| Load voltage | 24-480VAC | 5-60VDC |
| Control voltage | 3-32VDC | 3-32VDC |
| Control current | DC5-25mA | DC5-25mA |
| ON voltage | ≤1.5V | ≤1.5V |
| Off Leakage Current | ≤2mA | ≤2mA |
| On-off Time | ≤10mS | ≤10mS |
| Dielectric Strength | 2500VAC | 2500VAC |
| Insulation Resistance | 1000MΩ | 1000MΩ |
| A mbient Temperature | -30~+75℃ | -30~+75℃ |
| Mounting Methods | DIN-Rail Mounting | DIN-Rail Mounting |
| The work instructions | Indicator light | Indicator light |

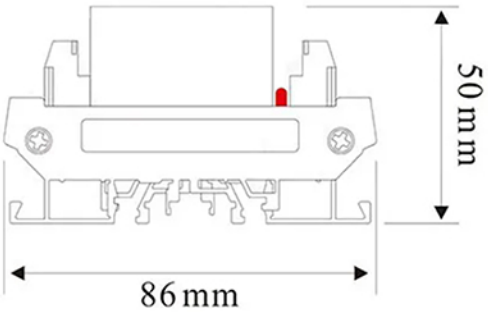


Side

# ▶ 8 CHANNELS RELAY MODULE

（8路继电器模组）



**SSR - 0□ - 5DA - C□ (DC control AC)**

- CP:Control terminal cmmon positive
- CP:Control terminal common negative
- 1 ,2 ,4 ,6 ,8 Channels

**SSR - 0□ - 5DD - C□ (DC control DC)**

- CP:Control terminal common positive
- CP:Control terminal common negative
- 1 ,2 ,4 ,6 ,8 Channels

**Selection Table**

| | | Model | | | Model | |
|---|---|---|---|---|---|---|
| 01 | | SSR-01-5DA | SSR-01-5DD | | SSR-01-5DA | SSR-01-5DD |
| 02 | CP Control | SSR-02-5DA-CP | SSR-02-5DD-CP | CN Control | SSR-02-5DA-CN | SSR-02-5DD-CN |
| 04 | | SSR-04-5DA-CP | SSR-04-5DD-CP | | SSR-04-5DA-CN | SSR-04-5DD-CN |
| 06 | | SSR-06-5DA-CP | SSR-06-5DD-CP | | SSR-06-5DA-CN | SSR-06-5DD-CN |
| 08 | | SSR-08-5DA-CP | SSR-08-5DD-CP | | SSR-08-5DA-CN | SSR-08-5DD-CN |

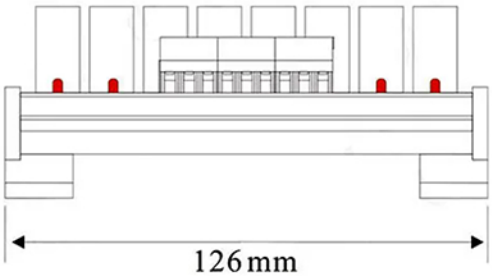


8 Channels Front

**Specifications**

| | | |
|---|---|---|
| Control model | DC-AC | DC-DC |
| Load current | 5A | 5A |
| Load voltage | 24-480VAC | 5-60VDC |
| Control voltage | 3-32VDC | 3-32VDC |
| Control current | DC5-25mA | DC5-25mA |
| ON voltage | ≤1.5V | ≤1.5V |
| Off Leakage Current | ≤2mA | ≤2mA |
| On-off Time | ≤10mS | ≤10mS |
| Dielectric Strength | 2500VAC | 2500VAC |
| Insulation Resistance | 1000MΩ | 1000MΩ |
| A mbient Temperature | -30~+75℃ | -30~+75℃ |
| Mounting Methods | DIN-Rail Mounting | DIN-Rail Mounting |
| The work instructions | Indicator light | Indicator light |

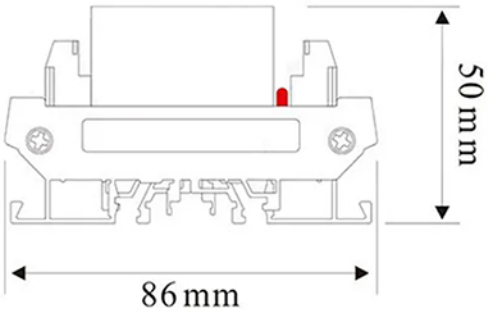


Side

# ▶ 10 GROUPS UTRA-THIN RELAY

（10组超薄继电器）

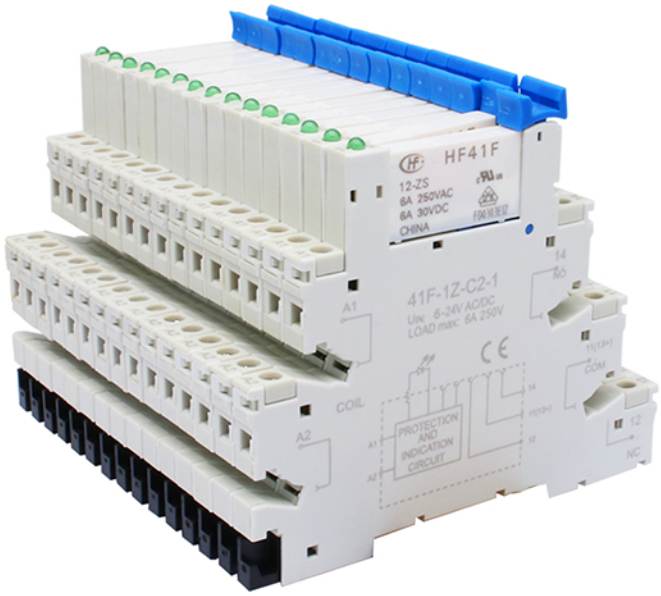


10 Groups HF41F ☐ ZS

Size:

unit:in

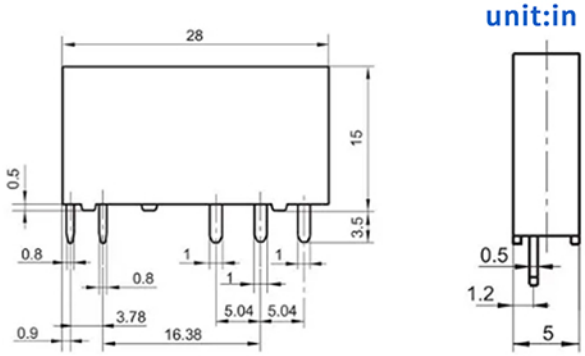


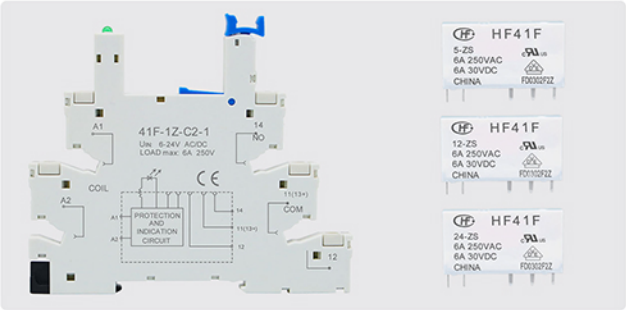


Relay and housing, both sold separately.
(继电器和外壳，均可单独出售。)

| | |
|---|---|
| Contact arrangement | 1H,1Z |
| Contact resistance | Gold plated contacts: 30mQ(1A6VDC) Non gold plated contacts: 30mQ(1A6VDC) |
| Contact material | AgSnOz, AgNi |
| Contact rating(Res.load) | 6A250VAC/30VDC |
| Max.switching voltage | 400VAC/125VDC |
| Max.switching current | 6A |
| Max.switching power | 1500VA/180W |
| Mechanical endurance | $1x10^7$times |
| Electrical endurance | H-type: $6x10^4$times<br>(AgNi,6A 250VAC/30VDCresistive load,85C,1s on and 9s off)<br>Z-type: $3x10^4$times<br>(NOAgNi,6A250VAC/30VDCresistive load85C,1s on and 9s off)<br>$1x10^4$times<br>(NOAgNi,6A250VAC/30VDC resistiveload, 85C,1s on and 9s off) |

| | |
|---|---|
| Insulation resistance | 1000MΩ(at500VDC) |
| Dielectric Strength | Between coil & contacts: 4000VAC1Min Between open contacts: 1000VAC1Min |
| Operate time(at nomi.volt.) | ≤8ms max. |
| Release time(at nomi.volt.) | ≤4ms max. |
| Shock resistance | Functional: $49m/s^2$ Destructive: $980m/s^2$ |
| Vibration resistance | 10-55Hz1mmDouble amplitude |
| Humidity | 5%-85%RH |
| Ambient temperature | -40C~+85C |
| Termination | Printed board PCB |
| Unit Weight | Approx.5g |
| Construction | Plastic sealed,Flux proofed |

# ▶ SINGLE UTRA-THIN RELAY
（单个超薄继电器）

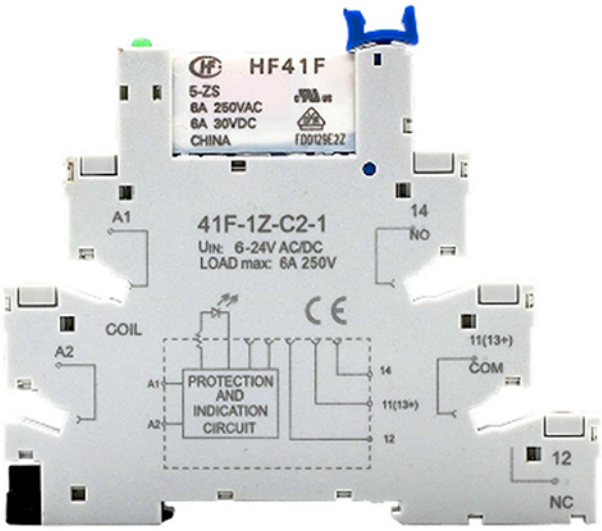


HF41F ☐ ZS

Size:

unit:in

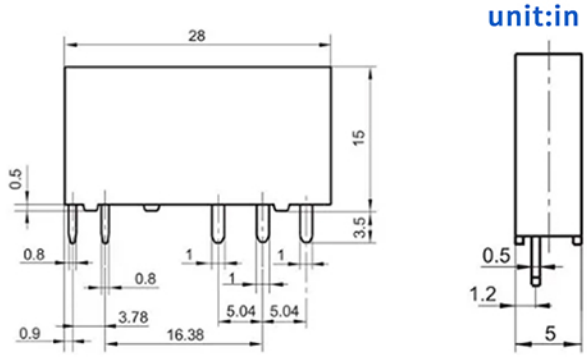


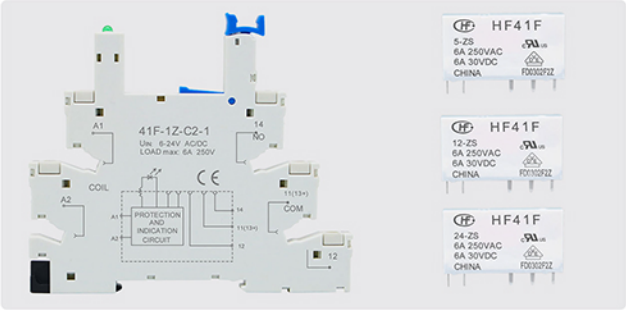


Relay and housing, both sold separately.
(继电器和外壳，均可单独出售。)

| | |
|---|---|
| Contact arrangement | 1H,1Z |
| Contact resistance | Gold plated contacts: 30mQ(1A6VDC) Non gold plated contacts: 30mQ(1A6VDC) |
| Contact material | AgSnOz, AgNi |
| Contact rating(Res.load) | 6A250VAC/30VDC |
| Max.switching voltage | 400VAC/125VDC |
| Max.switching current | 6A |
| Max.switching power | 1500VA/180W |
| Mechanical endurance | $1x10^7$times |
| Electrical endurance | H-type: $6x10^4$times<br>(AgNi,6A 250VAC/30VDCresistive load,85C,1s on and 9s off)<br>Z-type: $3x10^4$times<br>(NOAgNi,6A250VAC/30VDCresistive load85C,1s on and 9s off)<br>$1x10^4$times<br>(NOAgNi,6A250VAC/30VDC resistiveload, 85C,1s on and 9s off) |

| | |
|---|---|
| Insulation resistance | 1000MΩ(at500VDC) |
| Dielectric Strength | Between coil & contacts: 4000VAC1Min Between open contacts: 1000VAC1Min |
| Operate time(at nomi.volt.) | ≤8ms max. |
| Release time(at nomi.volt.) | ≤4ms max. |
| Shock resistance | Functional: $49m/s^2$ Destructive: $980m/s^2$ |
| Vibration resistance | 10-55Hz1mmDouble amplitude |
| Humidity | 5%-85%RH |
| Ambient temperature | -40C~+85C |
| Termination | Printed board PCB |
| Unit Weight | Approx.5g |
| Construction | Plastic sealed,Flux proofed |

## LC-500 D75D


LC-500 D75D

| | |
|---|---|
| Surge Current（浪涌电流） | 500A |
| Control Voltage Range（控制电压范围） | 3-32VDC |
| Load Max Voltage（负载最大电压） | 75VDC |
| Max Input Current（最大输入电流） | 18mA |
| Must Operation Voltage（确保导通工作电压） | 3VDC |
| Mustrelease Voltage（确保导通释放电压） | 2VDC |
| Max Off-State Leakage Current（最大断态漏电流） | 2mA |
| Response Time（响应时间） | ≤20mS |
| Dielectric Strength（介质耐压） | 2500VAC |
| Operating Temperature（工作温度） | -20°C to 80°C |
| Dimensions(mm)（尺寸） | 105x74x53 |
| Net Weight（净重） | 450g |

## LC-1000D75D


LC-1000 D75D

| | |
|---|---|
| Surge Current（浪涌电流） | 1000A |
| Control Voltage Range（控制电压范围） | 3-32VDC |
| Load Max Voltage（负载最大电压） | 75VDC |
| Max Input Current（最大输入电流） | 36mA |
| Must Operation Voltage（确保导通工作电压） | 3VDC |
| Mustrelease Voltage（确保导通释放电压） | 2VDC |
| Max Off-State Leakage Current（最大断态漏电流） | 2mA |
| Response Time（响应时间） | ≤20mS |
| Dielectric Strength（介质耐压） | 2500VAC |
| Operating Temperature（工作温度） | -20°C to 80°C |
| Dimensions(mm)（尺寸） | 105x74x53 |
| Net Weight（净重） | 450g |

# DTY SINGLE PHASE AC VOLTAGE REGULATOR MODULE (DTY单相交流调压模块)


DTY220D□P

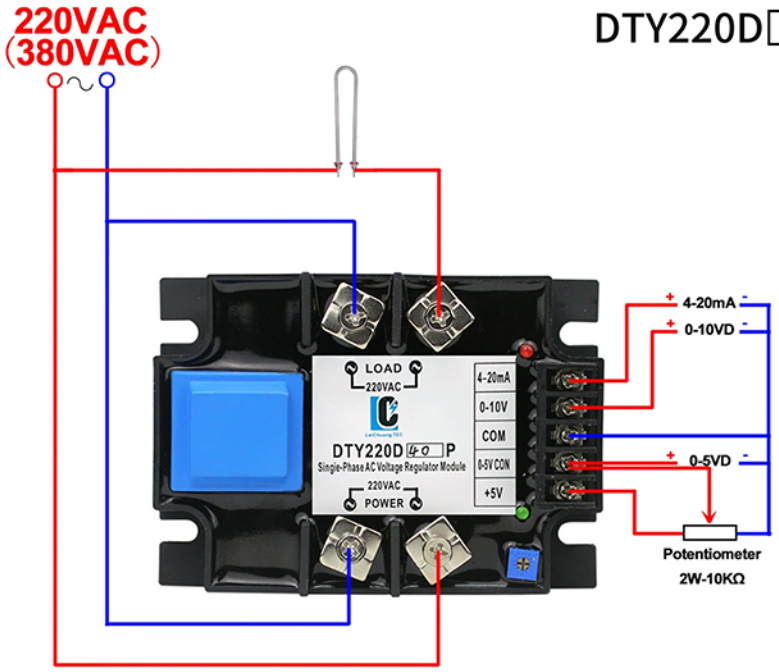


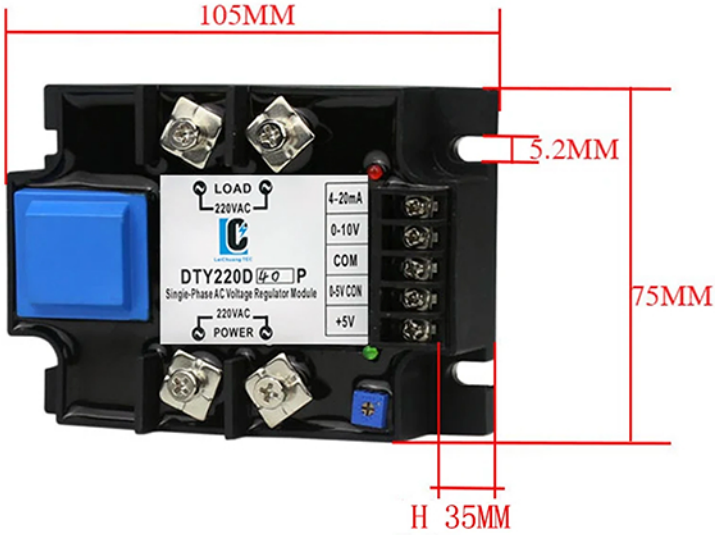


**The control terminal cannot be powered on at the same time,**
**You can choose one of the four modes!**

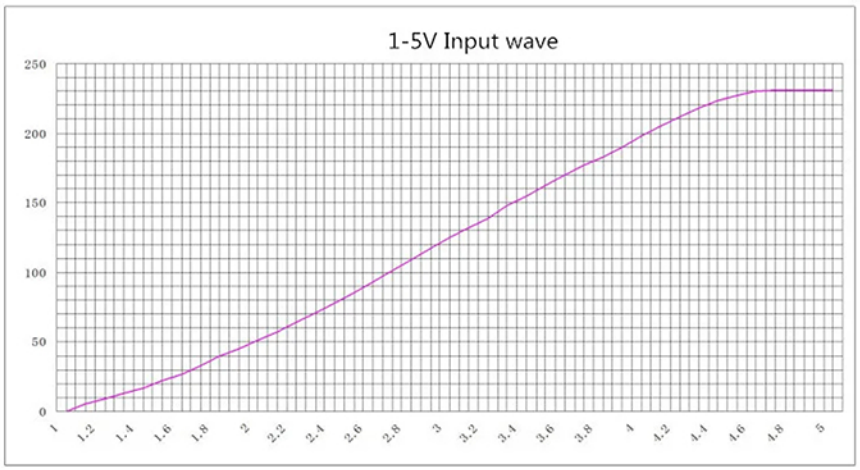


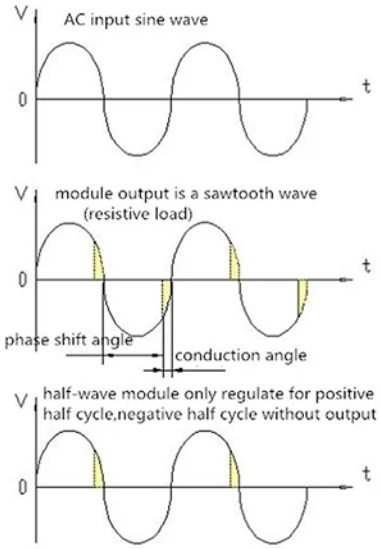

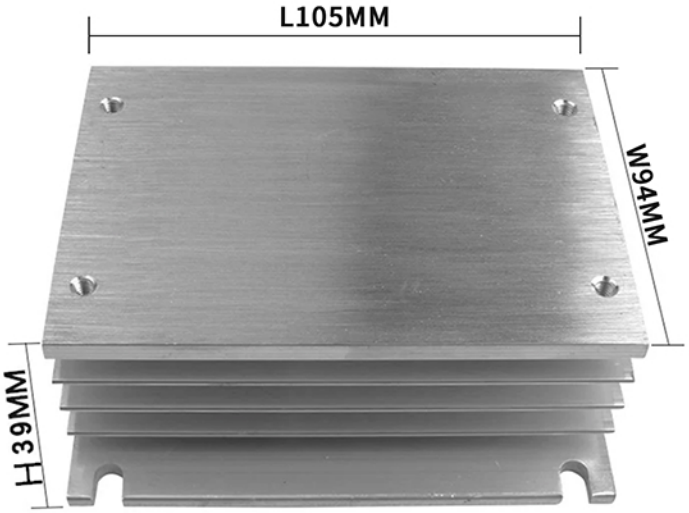


**F-100 ☐ A**
└ 10-25

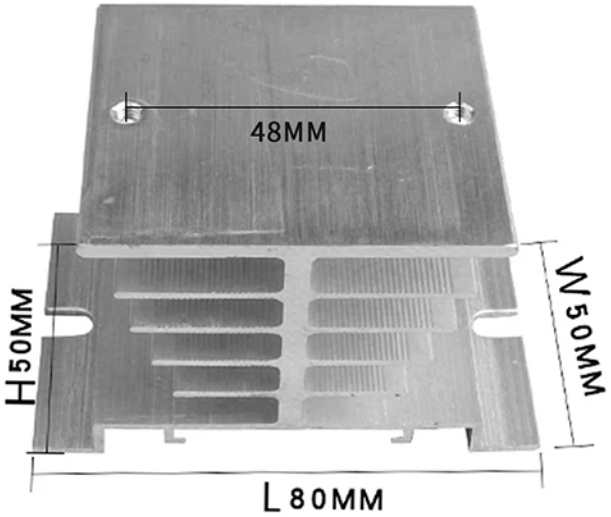


**L-50 ☐ A**
└ 10-25, 40

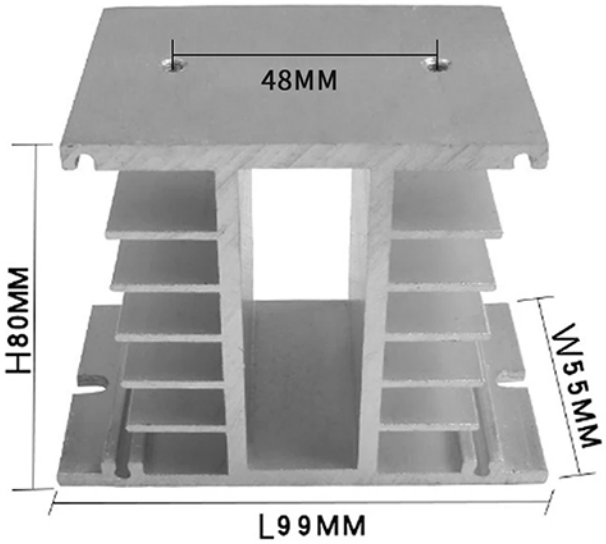


**H-50 ☐ A**
└ 10-60


**D-75 ☐ A**
└ 40-80

# ▶ HEAT SINK
（散热器）

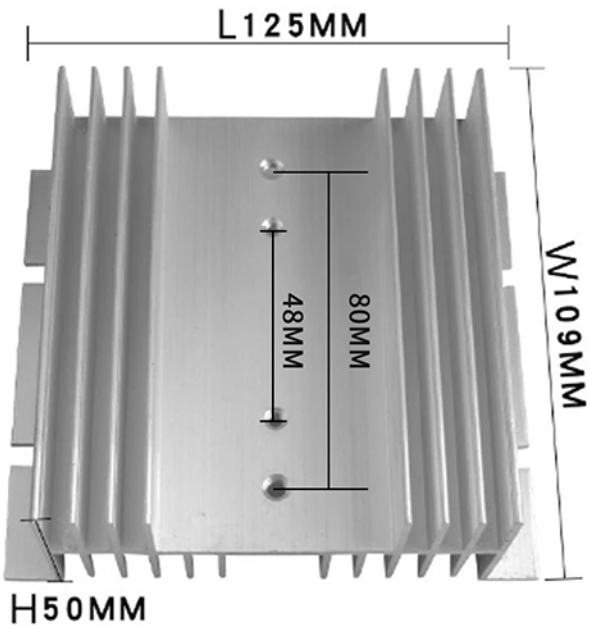



**W-100 ☐ A**
10-80

**T-50 ☐ A**
100

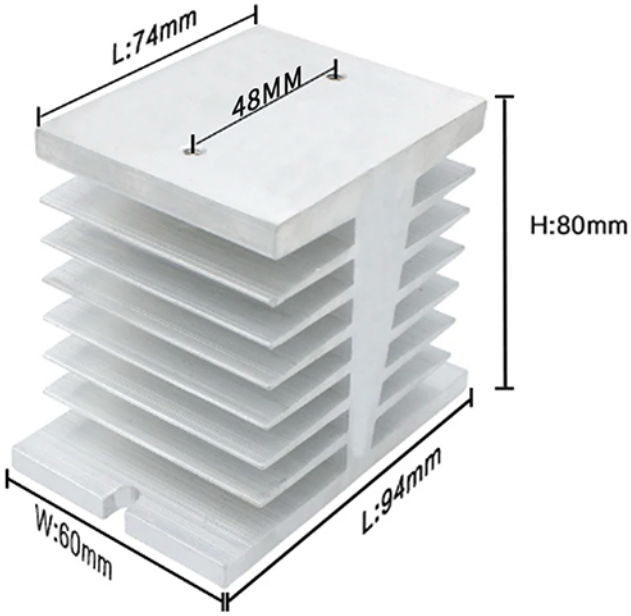


**F-60 ☐ A**
10-60

# ▶ THREE-PHASE COOLING
（三相散热）

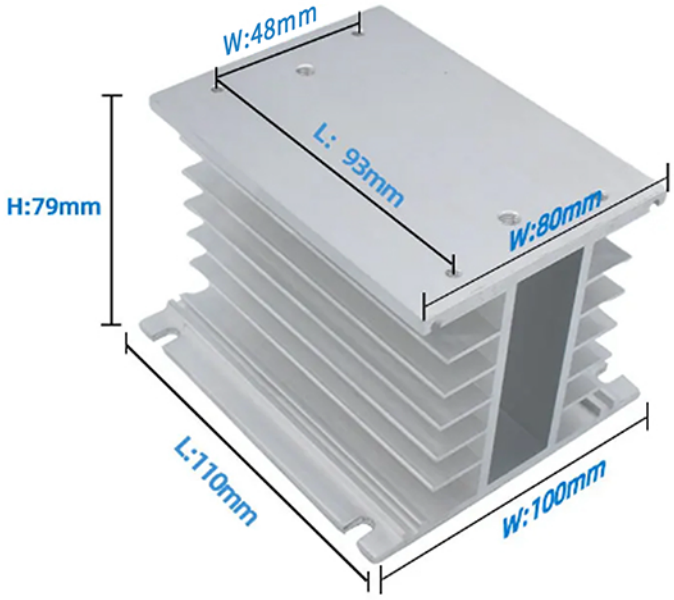


H-100 ☐ A
└ 10-25

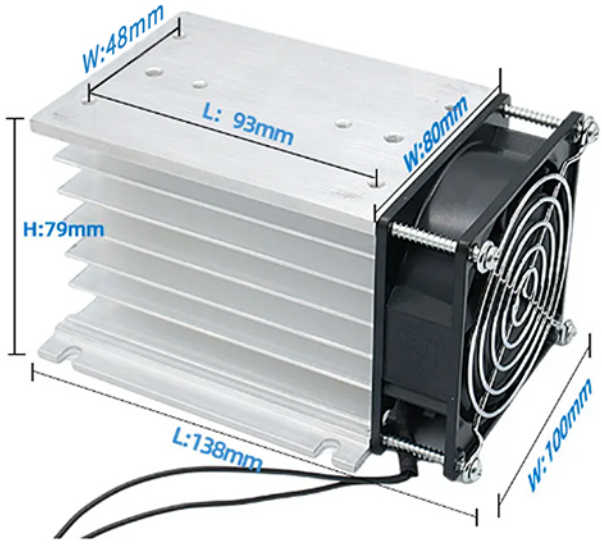


H-110 ☐ A
└ 40


Y-110 ☐ A
└ 80

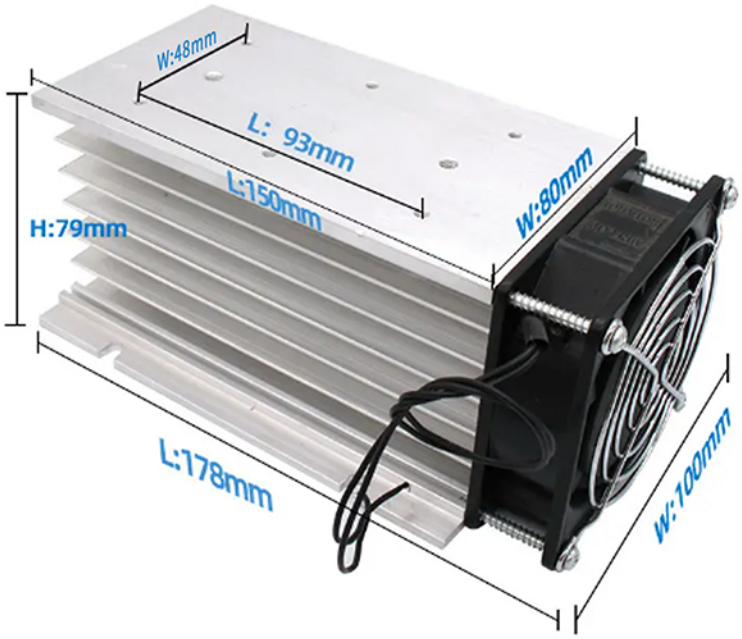


H-150 ☐ A
└ 60

# THREE-PHASE COOLING
（三相散热）


Y-150 ☐ A
└ 100-120


Y-200 ☐ A
└ 150-250


Y-300 ☐ A
└ 300-350